Notes

Intercloud

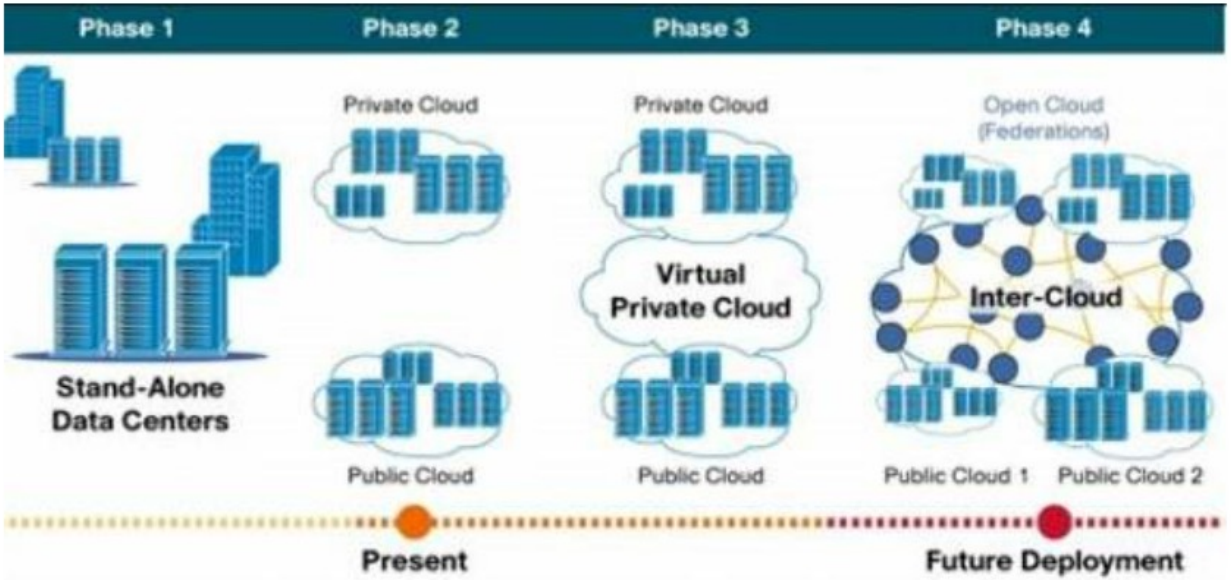

https://www.bbvaopenmind.com/en/technology/digital-world/cloud-clouds-intercloud/#:~:text=Intercloud%20or%20'cloud%20of%20clouds,terms%20of%20on%2Ddemand%20operations.

Mobile Cloud Computing

- Mobile cloud computing (MCC) is the method of using cloud technology to deliver mobile apps. Complex mobile apps today perform tasks such as authentication, location-aware functions, and providing targeted content and communication for end users.
- Hence, they require extensive computational resources such as data storage capacity, memory, and processing power.
- Mobile cloud computing takes the pressure off mobile devices by harnessing the power of cloud infrastructure.

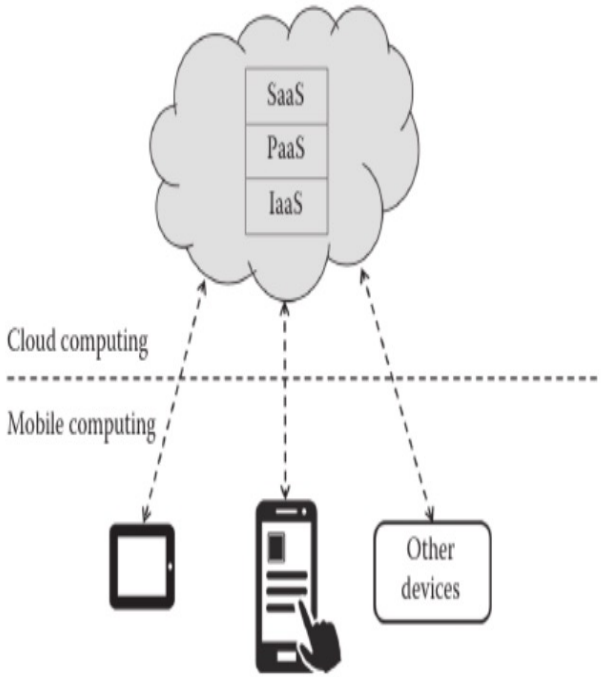

A remote cloud server offering services to a mobile device.

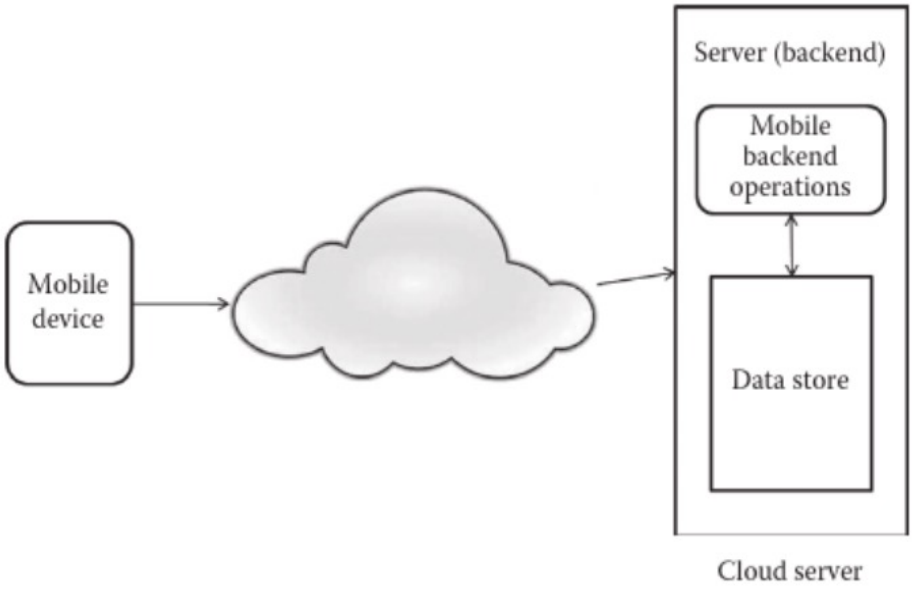

Media Cloud

Media Cloud is a platform for studying media ecosystems. By tracking millions of stories published online, the system allows researchers to track the spread of memes, media framings, and the tone of coverage of different stories.

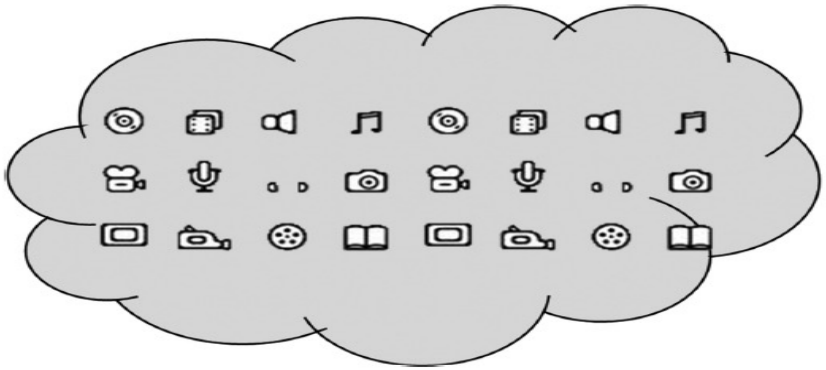

Hybrid cloud

- Certain situations–such as regulatory hurdles, security concerns, reliance on legacy applications, or abnormal data sets or workflows–have been encumbrances to migrating entire organizations to public cloud providers.
- The solution is the hybrid cloud model.

Executive summary

- What is hybrid cloud? Hybrid cloud is the combination of compute and storage products from public cloud providers and private, on-premises hardware.
- Why does hybrid cloud matter? Hybrid cloud systems do not have a single point of failure, and can be very effectively utilized for industries with variable workloads.
- Who does hybrid cloud affect? Any industry with at minimum a need to safeguard data against loss can utilize a hybrid cloud solution.
- What vendors offer hybrid cloud solutions? Vendors are becoming more responsive to the complexities of managing hybrid cloud deployments and are offering more solutions and tools to assist in transition and deployment.
- How do I build a hybrid cloud? Building a hybrid cloud for your organization requires planning and forethought. Working with vendors to find solutions to your needs is advisable.

Hybrid cloud

- Hybrid cloud is the combination of compute or storage products from public cloud services with a private cloud infrastructure.
- The public and private environments operate effectively independently of each other.

Hybrid cloud

- There is a discrete difference between hybrid cloud architecture and multicloud.
- Hybrid cloud requires utilization of both public and private cloud components,
- Whereas multicloud is the practice of using cloud services from multiple heterogeneous public cloud providers.

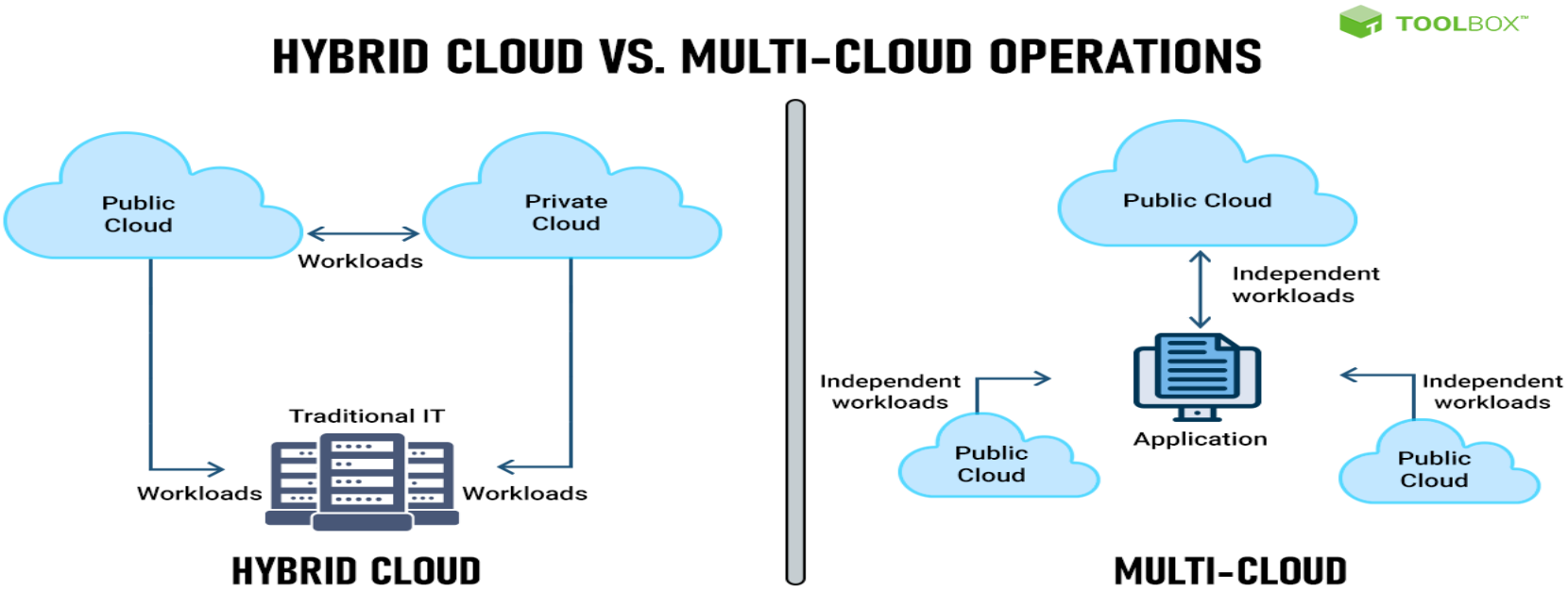

https://www.toolbox.com/tech/cloud/articles/multi-cloud-vs-hybrid-cloud/

Why does hybrid cloud matter?

- Hybrid cloud provides the best of both worlds of computing.
- Having Public cloud: instantly provision compute and storage resources on demand
- Having a private cloud component provides peace of mind
- Hybrid cloud solutions: AWS Outposts, Azure Stack, Fujitsu Hybrid Cloud Services

Practical Guide to Hybrid Cloud Computing

Hybrid cloud

- The ISO 17788 Cloud Computing Overview and Vocabulary standard [2] defines hybrid cloud as "a cloud deployment model using at least two different cloud deployment models" – where the potential deployment models are public cloud, private cloud and community cloud.
- Based on this definition, there are many combinations of cloud resources that can be leveraged in a hybrid cloud deployment.
- It is also important to recognize that private cloud services could be hosted on-premises or alternatively hosted off-premises in a dedicated part of a cloud service provider's data center.

off-premises versus on-premises cloud computing

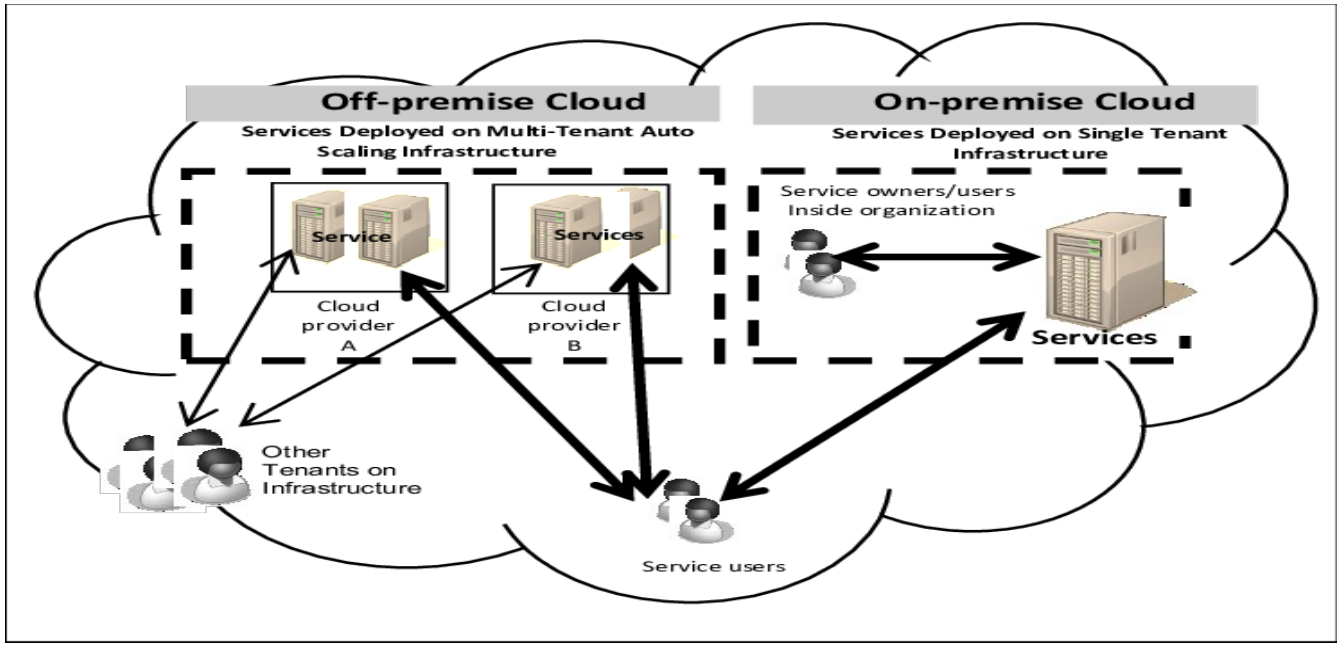

https://www.researchgate.net/figure/SoA-deployed-on-off-premises-versus-on-premises-cloud-computing_fig1_262374267

Key considerations that need to be taken into account

- Integration: Hybrid cloud computing is about aggregation and integration of capabilities and services from cloud service providers with on-premises resources, leveraging the best-of-breed.
- New capabilities from a wide variety of services (on- premises and off-premises) can now be aggregated to provide the business with a broader set of capabilities on which to act.

Key considerations that need to be taken into account

- Composition: Hybrid cloud is about combining services and capabilities, while at the same time dealing with risks and regulations in a satisfactory way.
- A set of services could be used on predetermined business needs, or they could be used for a limited period.

Key considerations that need to be taken into account

- Organizational Impact: People in many different roles are impacted by hybrid cloud in a variety of ways. The value of hybrid cloud is highly dependent on what is important to your organization.

Hybrid cloud means different things to different people

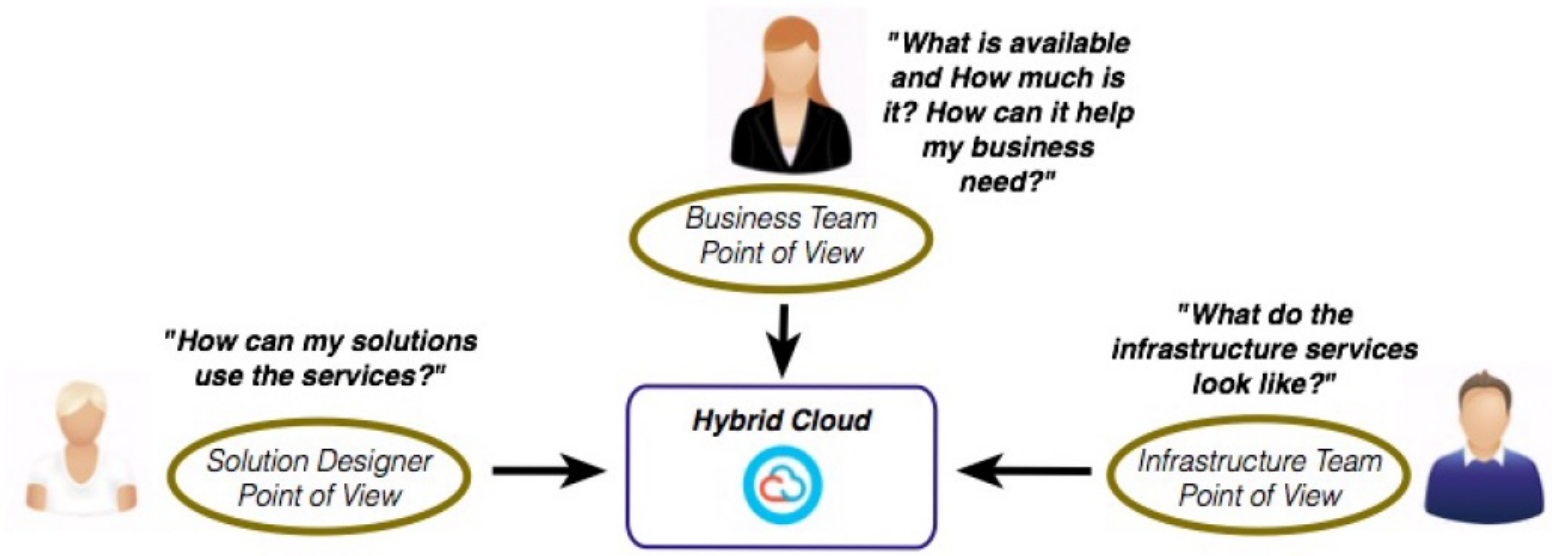

Solution Designer Perspective: “Give me more options”

A solution designer typically looks to hybrid cloud for options and capabilities that are not available in an on-premises or off-premises only solution.

For designers and developers some of the critical success factors related to hybrid cloud include:

- Flexibility.
- Speed.
- Capacity.
- Consistency.
- Agility.

Infrastructure Perspective: “More things to manage”

This team typically looks at hybrid cloud based on SLAs, processes, and resources (compute, storage and networking). For the infrastructure team some of the critical success factors related to hybrid cloud include the ability to:

- Have visibility
- Monitor all infrastructure resources
- Access all resources on the hybrid cloud to perform activities as required.
- Manage the deployed infrastructure
- Enforce consolidated security across the hybrid cloud
- Control provisioning of workloads based on organizational policies.

Business Team Perspective: “What is available? How much is it? What value does it provide?”

For business teams, some of the critical success factors related to hybrid cloud include the ability to:

- View of what is running where and what the financial implications are by organization/department.
- Understand the SLAs of a solution
- Have consolidated invoices
- Access the systems running on the hybrid cloud
- Perform financial “what if” modeling
- Reduce costs and increase business flexibility
- Understand software licensing exposure across the cloud providers being utilized.

Why Hybrid Cloud is important to the business

In terms of IT, businesses today operate at multiple speeds. To meet the challenges of competition and the rapidly evolving marketplace, businesses need to be agile and innovative, particularly for mobile and web applications used by customers. At the same time, the stable processes and systems that keep the business running cannot be replaced easily and instead evolve at a slower pace. This is *two speed IT*. One part, the *steady speed*, delivers enterprise-strength IT services, and the other part, *fast speed*, enables exploitation of new digital business opportunities. However, success comes through optimizing support for both types of IT. Hybrid cloud can help provide a solution to this need.

Prescriptive guidance for successful implementation of Hybrid Cloud

Prescriptive series of steps that should be taken to ensure successful hybrid cloud computing deployment from the perspective of a cloud service customer.

- Determine cloud deployment model for applications and data
- Integrate with existing enterprise services
- Address connectivity requirements
- Develop governance policies and service agreements
- Assess and resolve security and privacy challenges
- Manage the hybrid cloud environment
- Consider a backup, archive and disaster recovery plan

The components and their interconnections that are involved in hybrid cloud computing

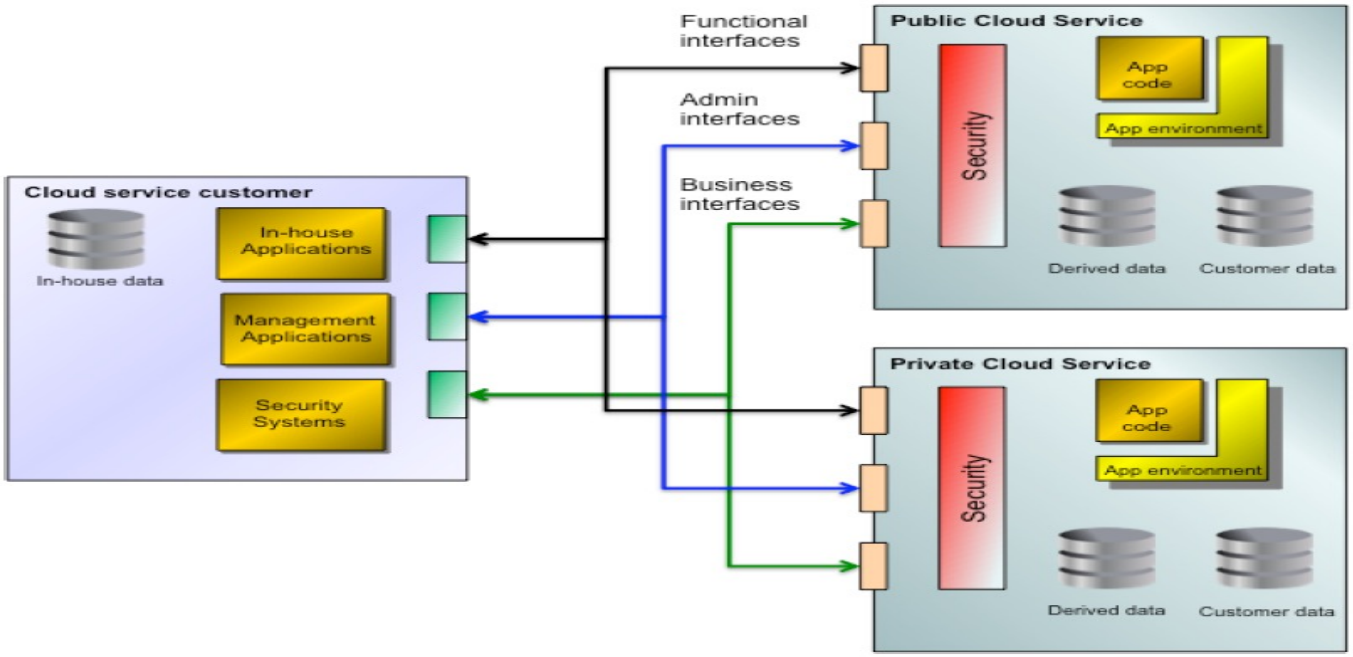

Determine Cloud Deployment Model for Applications and Data

The cloud deployment model must address the following:

- What cloud resources should be deployed
- What applications, services and data should go where

Which cloud service model to use for the application:

- *IaaS*: well suited to cases where the application and its required software stack already exist and are well understood by the enterprise - move the whole set of software into one or more virtual machines with associated storage resources.

- *PaaS*: well suited to applications built for runtimes and services supported by a complete middleware platform, especially where the enterprise wants to be relieved of the burden of maintaining and operating complex software stacks if required by the application. Also particularly suited to creating new custom applications with minimum effort and risk.

- *SaaS*: well suited to cases where the enterprise wants to avoid the costs and risks of developing custom applications, where standard off-the-shelf cloud services provide the required business capabilities.

The criteria used when deciding between public and private (on and off-premises) cloud deployment.

- Flexibility
- Security
- Speed and Automation
- Cost
- Locality
- Service levels
- System interdependencies

Integrate with Existing Enterprise Systems

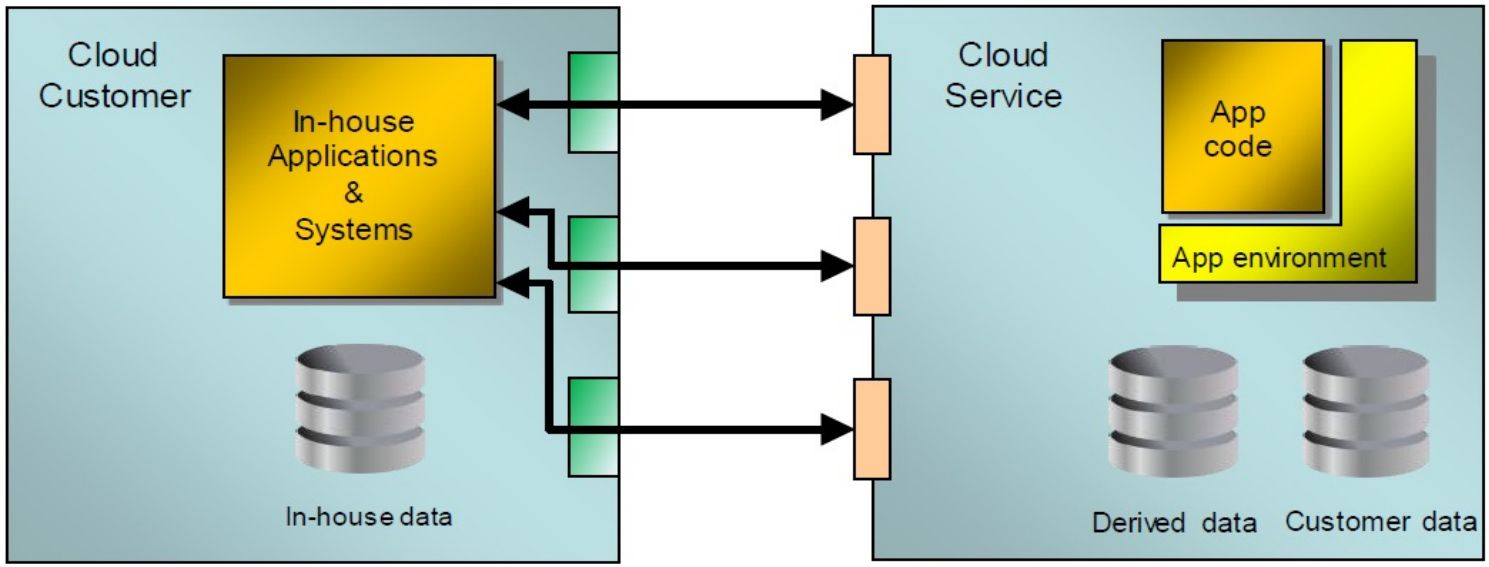

Figure 4: Linking In-house capabilities to Public Cloud Services

Integrate with Existing Enterprise Systems

Cloud service customers need to understand the impact of these connections and address it. Integration between applications is typically classified into three types:

- ❑ Process
- ❑ Data Integration
- ❑ Presentation Integration

Address Connectivity Requirements

Connectivity in the hybrid cloud is a key domain for successful deployments. It must also support the hybrid cloud solution by:

- Meeting requested service levels (e.g., user experience);
- Adhering to the security policies and
- Enabling the overall IT management strategy

Develop Governance Policies and Service Agreements

- Operating under a governance framework and service agreements.

- Governance : the system by which the provision and use of cloud services are directed and controlled.

- Internal cloud governance

- External cloud governance

Manage the Cloud Environment

Here are the critical steps cloud customers must take to plan a management solution for hybrid cloud:

- ❑1 – Analyze the management processes and use cases you need to implement
- ❑2 – Analyze on-premises management tooling
- ❑3 – Analyze cloud service provider management functions and the service responsibility line

Consider a Backup, Archive and Disaster Recovery Plan

In case there is a disaster, the DR solution must meet the following requirements:

- Ability to access DR configuration information within the timeframe that has been agreed upon with the cloud provider.
- Access to a data center site with availability requirements and metrics consistent with the source site.
- Ability to restart operations in full compliance with expectations (RTO and RPO).

(RTO: recovery time objective) (RPO: recovery point objective)

How much data can you afford to recreate or lose?
How quickly must you recover? What is the cost of downtime?
Disaster
Recovery point (RPO)
Recovery time (RTO)
Data loss
Down time